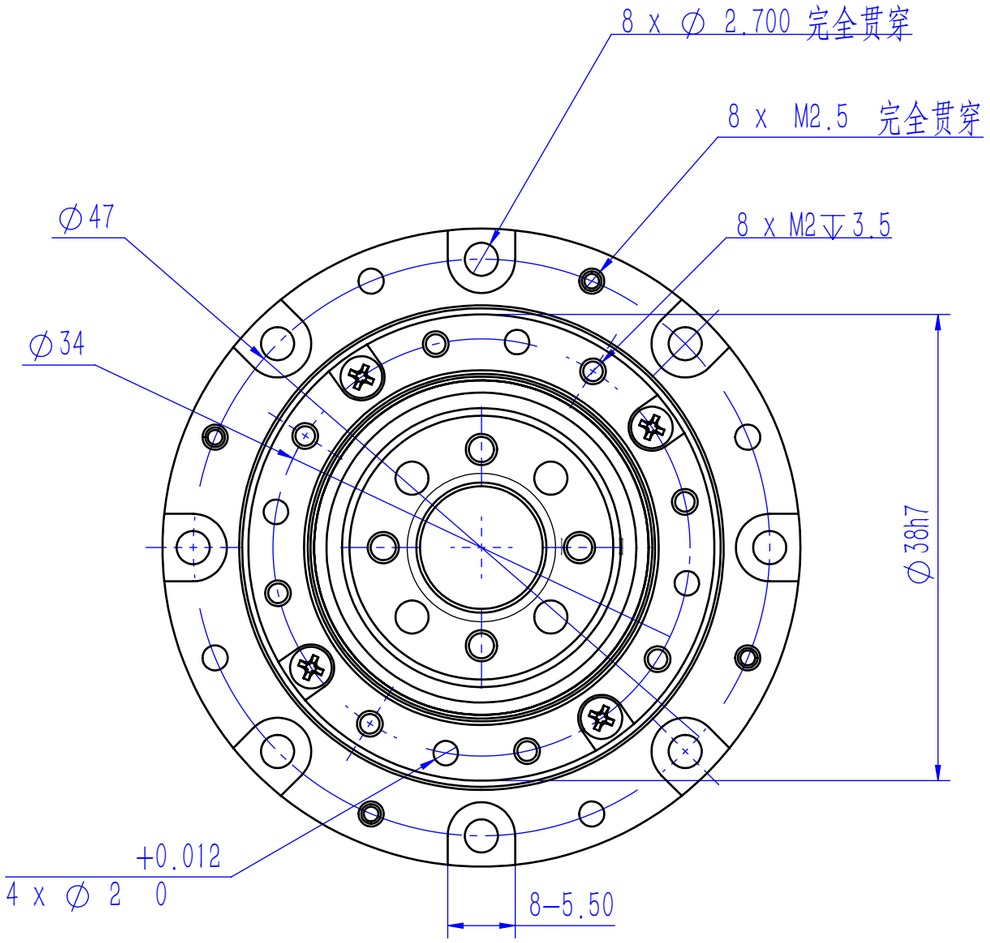
8 x ∅ 2.700 完全贯穿
8 x M2.5 完全贯穿
8 x M2↧3.5
∅47
∅34
∅38h7
4 x ∅ 2 +0.012 0
8-5.50

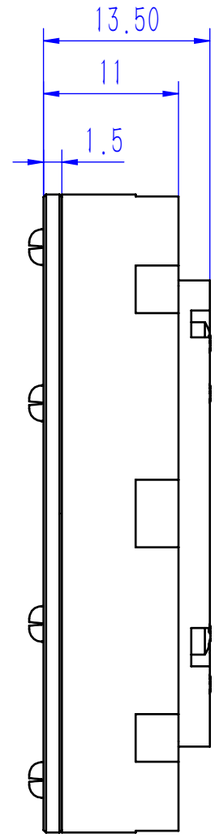
13.50
11
1.5

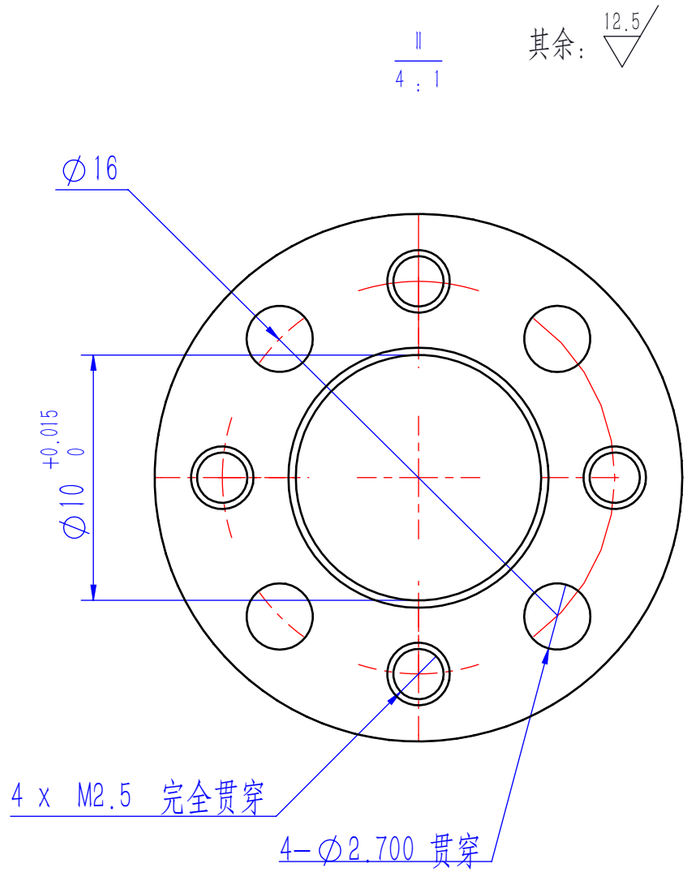
II
4 : 1
其余: 12.5
∅16
∅10 +0.015 0
4 x M2.5 完全贯穿
4-∅2.700 贯穿

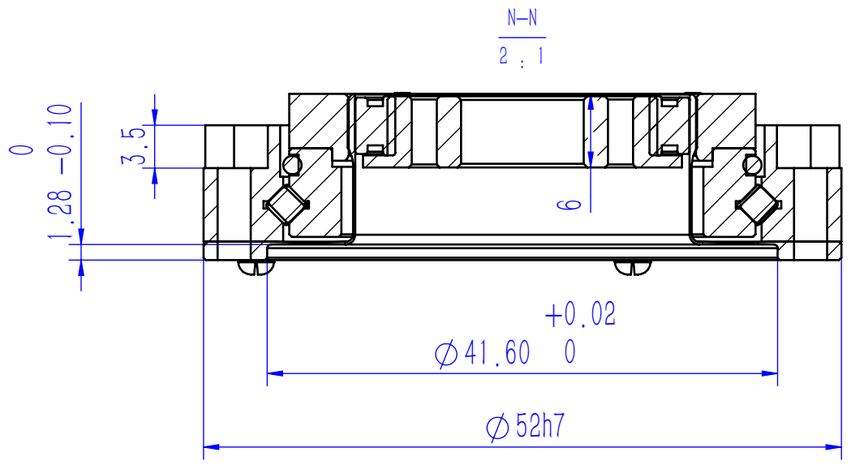
N-N
2 : 1
1.28 0 -0.10
3.5
6
∅41.60 +0.02 0
∅52h7
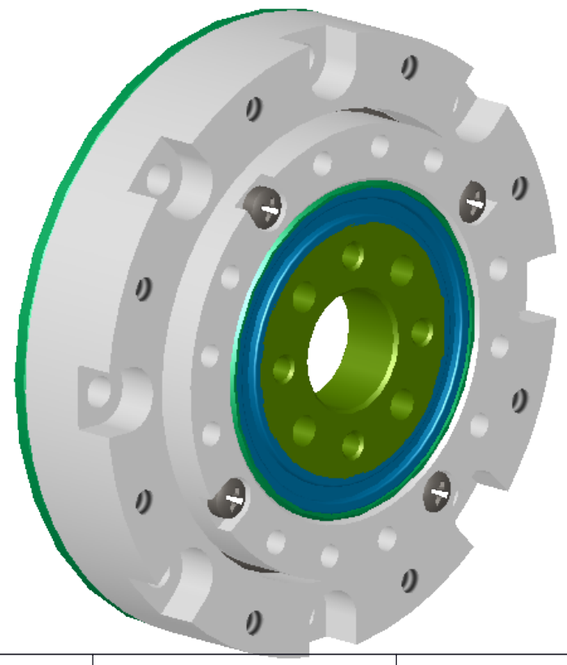
SHD-11-XXX