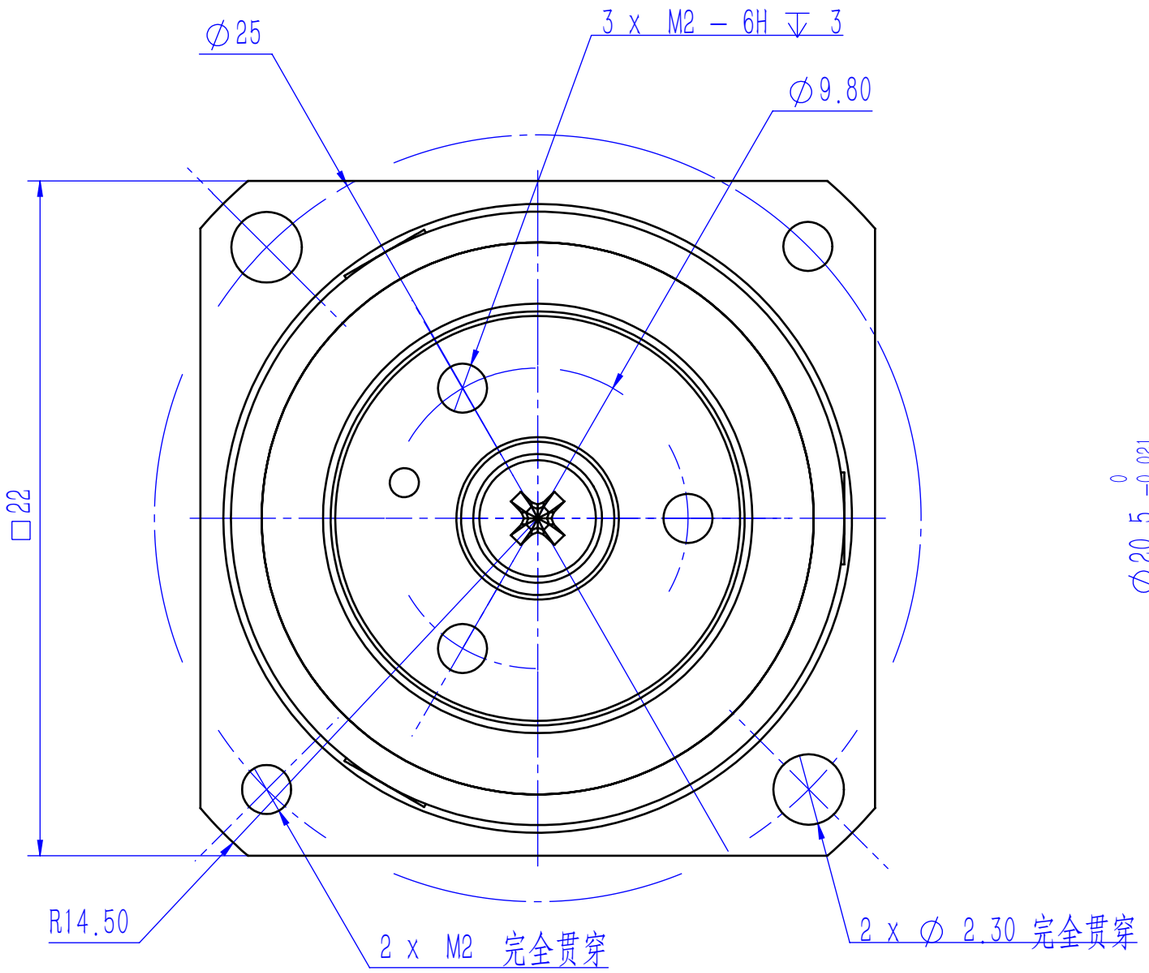

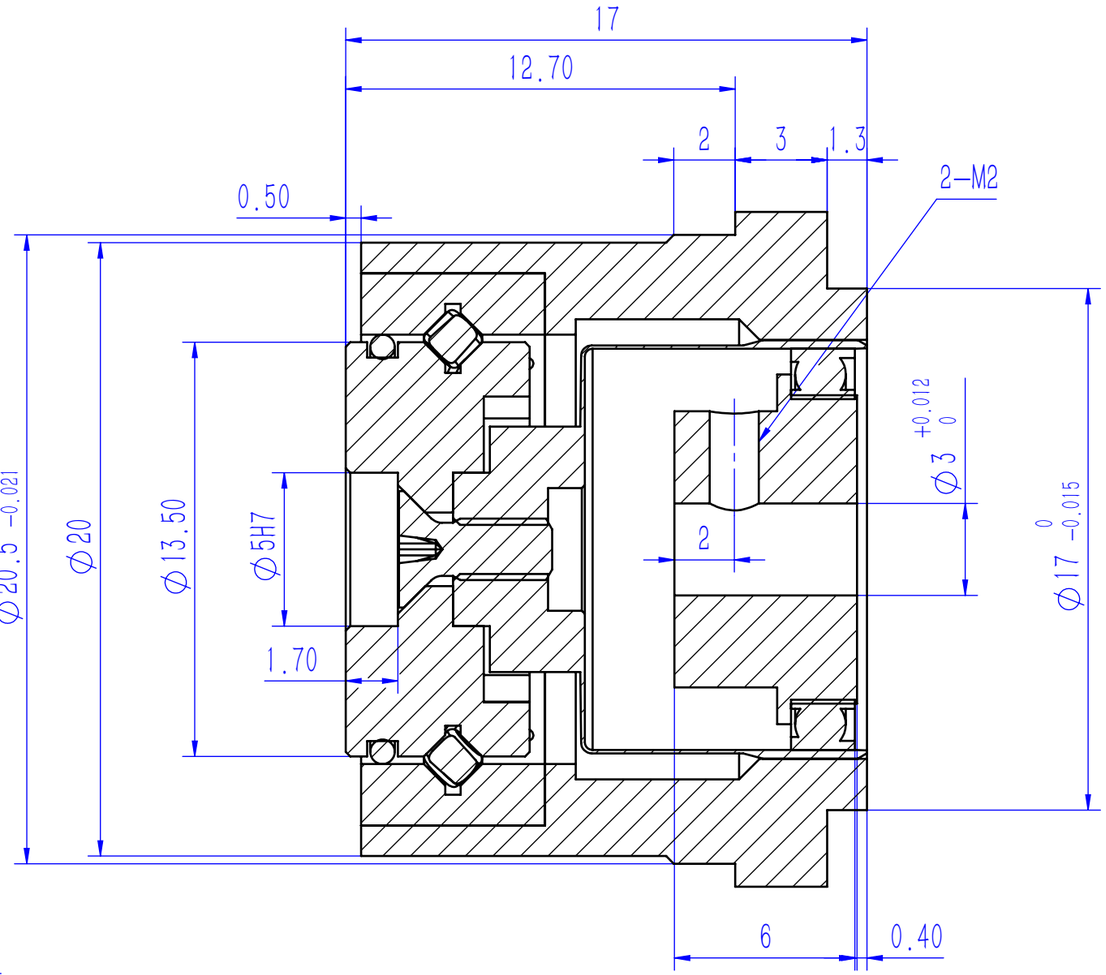
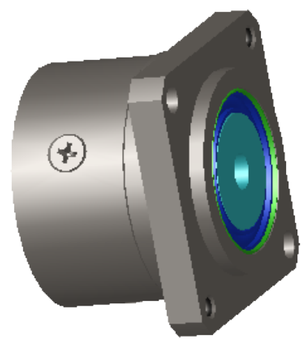
CSF–05–xxx–2XH–F