PRODUCT NUMBER

Single Encoder

Actuator Full Name	Product Code	With brake/Without Brake
RMD-X8-P9-25-R-N	1102030090230100	N (without brake)
RMD-X8-P9-25-C-N	1102030090130100	N (without brake)

* 1. The standard motor doesn't support brake, support customization.
* 2. The standard motor doesn't support IP54, support customization.
* 3. The standard motor support CAN BUS and RS485.

INSTALLATION DRAWING

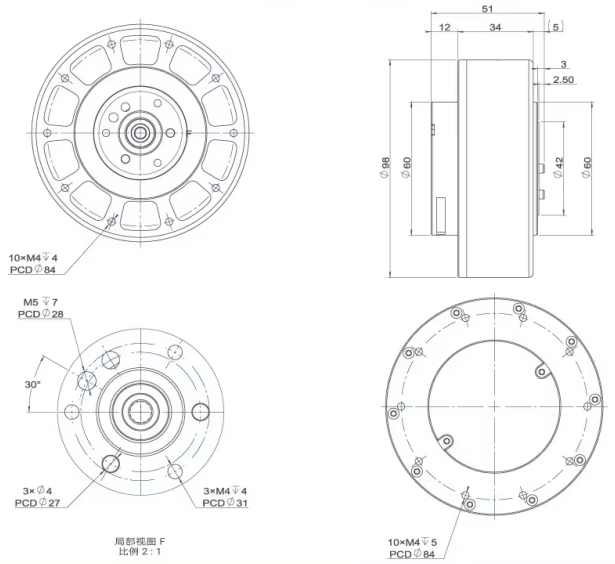

PRODUCT PARAMETERS

Parameters	Unit	X8-25
Gear ratio		9
Input Voltage	V	48
Rated Speed	RPM	110
Rated Torque	N.m	10
Rated Power	W	125
Rated Current	A	3.2
Peak Torque	N.m	25
Peak Current	A	8
Efficiency	%	80
Pole Pair	—	21
Anti-Force Torque	N.m	0.61
Backlash	Arcmin	10
Axial Payload	N	985
Radial Payload	N	1250
Inertia	$Kg.cm^2$	30.6
Encoder Type	bit	18
Communication	—	CAN:1M/RS485:115200/500K/1M/2.5M
Weight	kg	0.71

*** Rated torque test method:** When the ambient temperature is 24 degrees Celsius (no other heat dissipation methods), the test is performed at the rated speed. The motor torque reaches temperature balance under the condition of a temperature rise of 60 degrees Celsius, and the long-term working point is the rated torque value of the motor.

MOTOR CHARACTERISTIC CURVE

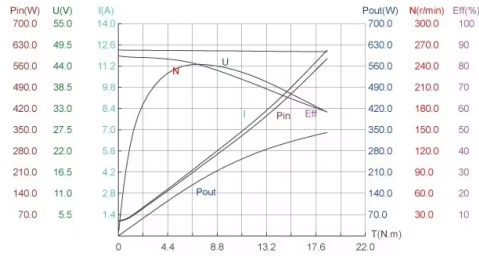

(Project)	T(N.m)	N(r/min)	Pout(W)	U(V)	I(A)	Pin(W)	Eff(%)
(No_Load)	0.04	254.3	1.16	48.14	1.011	48.71	2.4
(Max_Eff)	7.19	242.0	181.30	47.99	4.676	224.36	80.8
(Max_Pout)	18.59	175.1	340.97	47.71	12.252	584.62	58.3
(Max_Torque)	18.59	175.1	340.97	47.71	12.252	584.62	58.3
(The End)	18.59	175.1	340.97	47.71	12.252	584.62	58.3

T(N.m)	N(r/min)	Pout(W)	U(V)	I(A)	Pin(W)	Eff(%)
0.04	254.3	1.16	48.14	1.011	48.71	2.4
0.10	254.2	2.76	48.14	1.013	48.82	5.6
0.19	254.0	4.95	48.14	1.020	49.11	9.9
0.31	253.8	8.20	48.14	1.035	49.84	15.9
0.48	253.5	12.84	48.14	1.069	51.48	23.7
0.72	253.1	19.00	48.13	1.136	54.68	32.6
1.01	252.7	26.66	48.12	1.248	60.06	41.5
1.35	252.4	35.74	48.11	1.411	67.92	49.6
1.75	252.3	46.14	48.11	1.622	78.02	56.4
2.19	252.2	57.75	48.10	1.867	89.82	62.0
2.68	251.9	70.52	48.09	2.139	102.84	66.7
3.21	251.5	84.41	48.07	2.432	116.91	70.7
3.79	250.8	99.36	48.06	2.748	132.10	74.0
4.41	249.9	115.21	48.05	3.091	148.53	76.7
5.07	248.7	131.68	48.03	3.460	166.18	78.7
5.75	247.1	148.39	48.02	3.850	184.88	80.0
6.46	244.9	165.02	48.00	4.257	204.34	80.6
7.19	242.0	181.30	47.99	4.676	224.36	80.8
7.93	238.6	197.12	47.97	5.104	244.83	80.6
8.69	234.6	212.41	47.96	5.542	265.77	80.1
9.47	230.3	227.16	47.94	5.992	287.23	79.3
10.26	225.7	241.28	47.92	6.455	309.32	78.3
11.07	220.9	254.67	47.90	6.933	332.10	77.0
11.88	216.0	267.22	47.89	7.427	355.66	75.5
12.69	210.9	278.86	47.87	7.941	380.13	73.8
13.52	205.7	289.59	47.85	8.480	405.72	71.8
14.35	200.4	299.53	47.83	9.046	432.63	69.7
15.19	195.1	308.80	47.80	9.643	460.94	67.5
16.03	190.0	317.52	47.78	10.267	490.56	65.2
16.88	185.0	325.71	47.76	10.915	521.26	62.9
17.73	180.1	333.47	47.73	11.579	552.73	60.6
18.59	175.1	340.97	47.71	12.252	584.62	58.3

FGHI :