PRODUCT NUMBER

Dual Encoder

Actuator Full Name	Product Code	With brake/Without Brake
RMD-X6-P8-8-R-N	1102020080230200	N (without brake)
RMD-X6-P8-8-C-N	1102020080130200	N (without brake)

* 1. The standard motor doesn't support brake, support customization.
* 2. The standard motor doesn't support IP54, support customization.
* 3. The standard motor support CAN BUS and RS485.

INSTALLATION DRAWING

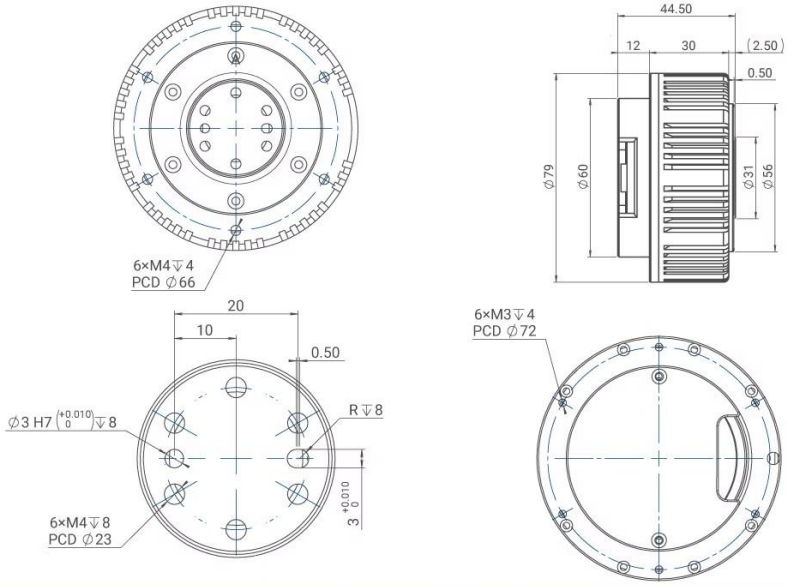

PRODUCT PARAMETERS

Parameters	Unit	X6-8
Gear ratio		8
Input Voltage	V	48
Rated Speed	RPM	310
Rated Torque	N.m	4.5
Rated Power	W	135
Rated Current	A	3.6
Peak Torque	N.m	8
Peak Current	A	7.2
Efficiency	%	78
Pole Pair	—	14
Anti-Force Torque	N.m	0.1
Backlash	Arcmin	10
Axial Payload	N	775
Radial Payload	N	1040
Inertia	$Kg.cm^2$	6.8
Encoder Type	bit	14 / 14
Communication	—	CAN:1M/RS485:115200/500K/1M/2.5M
Weight	kg	0.49

*** Rated torque test method:** When the ambient temperature is 24 degrees Celsius (no other heat dissipation methods), the test is performed at the rated speed. The motor torque reaches temperature balance under the condition of a temperature rise of 60 degrees Celsius, and the long-term working point is the rated torque value of the motor.

MOTOR CHARACTERISTIC CURVE

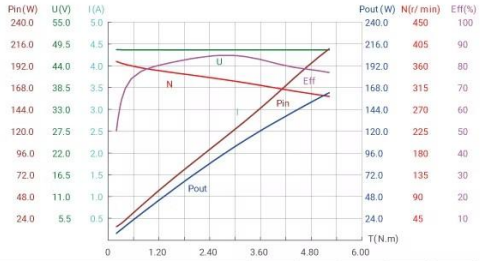

(Project)	T(N.m)	N(r/min)	Pout(W)	U(V)	I(A)	Pin(W)	Eff(%)
(No_Load)	0.227	368	8.73	48.05	0.329	15.80	54.9
(Max_Eff)	2.634	333	91.90	48.03	2.260	108.57	84.8
(Max_Pout)	5.223	297	162.39	48.02	4.386	210.62	77.0
(Max_Torque)	5.223	297	162.39	48.02	4.386	210.62	77.0
(The End)	5.223	297	162.39	48.02	4.386	210.62	77.0
(The Rated)	5.223	297	162.39	48.02	4.386	210.62	77.1

T(N.m)	N(r/min)	Pout(W)	U(V)	I(A)	Pin(W)	Eff(%)
0.227	368	8.73	48.05	0.329	15.80	54.9
0.196	369	7.54	48.05	0.313	15.04	50.3
0.227	368	8.73	48.05	0.329	15.80	54.9
0.292	366	11.21	48.05	0.371	17.83	62.2
0.327	365	12.53	48.05	0.397	19.10	65.1
0.405	363	15.43	48.04	0.461	22.15	69.6
0.544	360	20.54	48.04	0.581	27.92	74.0
0.775	356	28.87	48.04	0.782	37.57	77.4
0.908	354	33.65	48.04	0.896	43.07	78.5
1.053	352	38.78	48.04	1.018	48.91	79.5
1.206	350	44.18	48.04	1.145	55.02	80.3
1.450	347	52.66	48.04	1.343	64.51	81.4
1.619	345	58.46	48.04	1.477	70.95	82.0
1.962	341	70.08	48.04	1.745	83.84	83.3
2.134	339	75.78	48.04	1.878	90.20	83.8
2.471	335	86.73	48.03	2.135	102.58	84.6
2.634	333	91.90	48.03	2.260	108.57	84.8
3.022	328	103.82	48.03	2.560	122.96	84.7
3.240	325	110.28	48.03	2.733	131.26	84.3
3.585	320	120.09	48.03	3.015	144.79	83.0
3.784	317	125.57	48.03	3.184	152.89	82.0
4.049	313	132.66	48.02	3.413	163.90	80.7
4.389	308	141.57	48.02	3.710	178.17	79.3
4.677	304	148.97	48.02	3.957	190.00	78.5
4.983	300	156.62	48.02	4.205	201.94	77.8
5.223	297	162.39	48.02	4.386	210.62	77.0

CDEF :