About MagicBot Z1

Part Name

The MagicBot Z1 whole body is divided into upper and , with multiple degrees of freedom. The head has 1 degree of freedom (Yaw). A single arm has 5+ degrees of freedom, including shoulder-body joint, upper arm joint, elbow joint, and wrist joint (optional). A single leg has 6 degrees of freedom, including hip joint, leg joint, hip joint, knee joint, and ankle joint. The waist has 1 degree of freedom (Yaw). Depending on the version, the whole body can be divided into the Z1 basic version with 24 degrees of freedom, and the Z1 development version with an optional 24-50 degrees of freedom. Having multiple joint motor degrees of freedom enables the robot to achieve precise motion and posture control. The MagicBot Z1_24 degrees of freedom humanoid robot body is shown in the figure below, and please refer to the physical product for details.

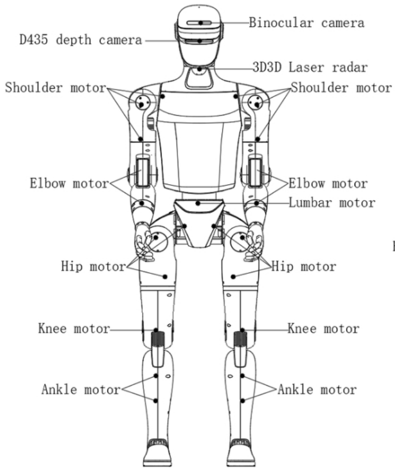

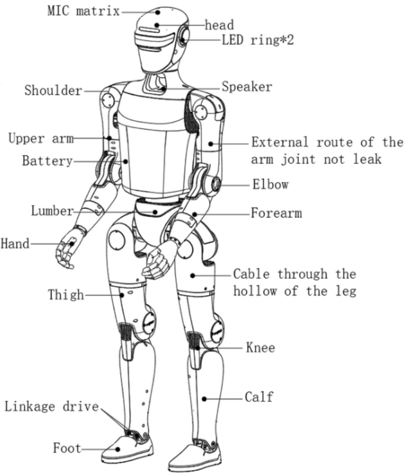

Dexterous Hand MagicHand S01

MagicHand S01 Specifications

Structure and Appearance	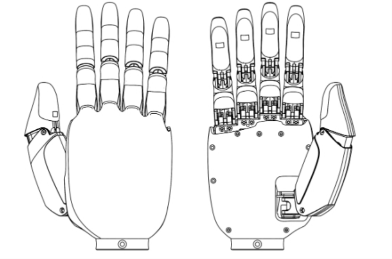
Length, Width, and Depth	200mm x 87mm x 55mm
Weight	≤650g
Rating	5
Total Degrees of Freedom (Number of Joints)	11
Active Degrees of Freedom (Number of Motors)	61, Active Degrees of Freedom for Common Fingers: 22, Active Degrees of Freedom for Thumb: 1
Joint Angles	Common Fingers Flexion: 13° to 203°; Thumb Flexion: -9° to 66.6°; Thumb Lateral Pendulum: 71° to 180°.
Drive mode	Coreless motor + reduction gearbox + T-type screw
Transmission mode	Connecting rod transmission
Actuation options	Pinching, grasping, pressing, lifting, pushing, and other anthropomorphic actions
Operating voltage	DC12V
Quiescent current	0.1A @12V
Maximum current	3A@12V
Proximity Sensing Solution	ToF
Number of Tactile Sensors	5
Tactile Sensor Dimensions	Normal Force, Tangential Force
Tactile Sensor Resolution*	0.1N
Tactile Sensor Range	0.1-10N
Single-Finger Grip Strength*	2.5kg
Four-Finger Grip Strength*	9.1kg
Total Hand Load*	5kg
End-of-Hand Repeatability*	0.1mm
Opening and Closing Time*	1.2s
Thumb Lateral Swing Speed*	112°/s
Thumb Flexion Speed*	106°/s
Four-Finger Flexion Speed*	150°/s
Communication Interface	RS485, EtherCAT

SDK Language	C++
Durability Lifespan*	More than 100,000 times

*Parameters such as single-finger grip strength, four-finger grip strength, and whole-hand load were measured in a laboratory environment.

*The above parameters may vary under different business scenarios and device configurations. Please refer to the actual usage experience.

Electrical Interface

The back of MagicBot Z1 is equipped with electrical interfaces, which are used to connect various body joint motors, sensor peripherals, network ports, etc. This design allows you to conveniently perform debugging, troubleshooting, and secondary development.

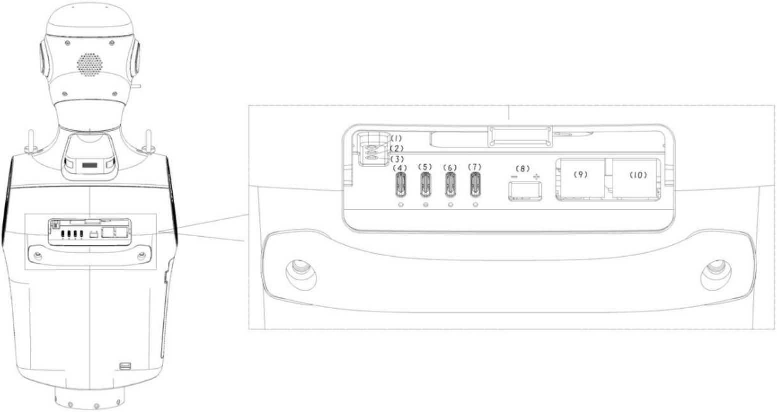

Serial Number	Interface Type	Interface Name	Instructions for Use
1	button	Remote control matching	Press and hold this button, the remote control will turn on and start pairing. The buzzer of the remote control will beep to complete the configuration, then release the button. For details, please refer to the user manual of the remote control.

2	button	Wireless Emergency Stop Matching	Press briefly 3 times to enter pairing mode. Press any key on the remote control to successfully complete the pairing.
3	button	Bluetooth Network Pairing Button	Press briefly once to enter Bluetooth pairing mode
4	Type-C	Type-C USB3.0	Supports USB3.0 Host, with a maximum output of 5V/1.5A
5	Type-C	Type-C USB3.0	Supports USB3.0 Host, with a maximum output of 5V/1.5A
6	Type-C	Type-C USB3.0	Supports USB3.0 Host, with a maximum output of 5V/1.5A
7	Type-C	Type-C USB3.0	Supports USB3.0 Host, with a maximum output of 5V/1.5A
8	XT30PW-M30.G.Y	VBAT	Directly connected battery output, voltage 54V, current recommended not to exceed 5A. Pay attention to the positive and negative poles
9	RJ45	1000Base-T	Supports 10/100/1000Mbps, supports debugging
10	RJ45	1000Base-T	Supports 10/100/1000Mbps, supports debugging

---

Airborne Computer

MagicBot Z1 comes standard with 1 [Motion Control Computing Unit] and 1 [Development Computing Unit] on board.

Parameter	Develop computing unit
Model	Jetson Orin NX
CPU	Arm® Cortex®-A78AE
Number of Cores	8
Number of Threads	8
Max Turbo Frequency	2GHz
Video Memory	16G
Memory	16G
Cache	2MB L2 + 4MB L3
Storage	512G
GPU	1024-core NVIDIA Ampere architecture GPU with 32 Tensor Cores
Maximum Dynamic Frequency of Graphics Card	918MHz
Gaussian and Neural Accelerator	3

Instruction Set Architecture	64bit
OpenGL	4.6
OpenGL ES	3.2
Vulkan™	1.1
CUDA	11.4

【Motion Control Computing Unit】 is dedicated to the magic atom motion control program and is not open to the public. Developers can only use the 【Development Computing Unit】 for secondary development.

Field of View of Z1 Radar and Camera

The MagicBot Z1 is equipped with a LIVOX-MID360 lidar on its head, providing the robot with excellent environmental perception capabilities. The lidar uses an all-round, full-angle scanning technology, with a horizontal FOV of up to 360° and a maximum vertical FOV of 49°, enabling it to obtain accurate environmental data in real time. It can quickly identify and measure surrounding objects, providing high-resolution point cloud data.

The Z1 head is equipped with a D435 depth camera (FOV horizontal 87°, vertical 58°) and a binocular fisheye camera (FOV horizontal 135°, vertical 75°). This provides the robot with excellent visual perception capabilities, enabling it to more accurately perceive and understand the surrounding environment, achieve precise spatial perception and obstacle detection, and allowing the robot to interact with the environment more intelligently and flexibly and handle various scenarios.

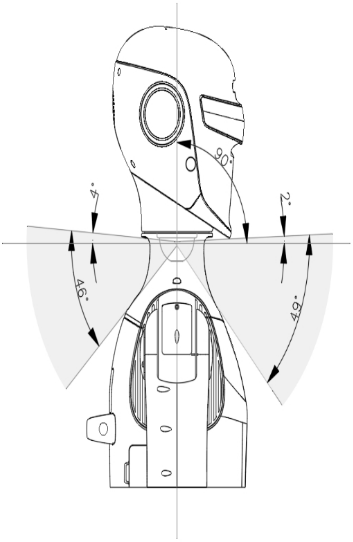

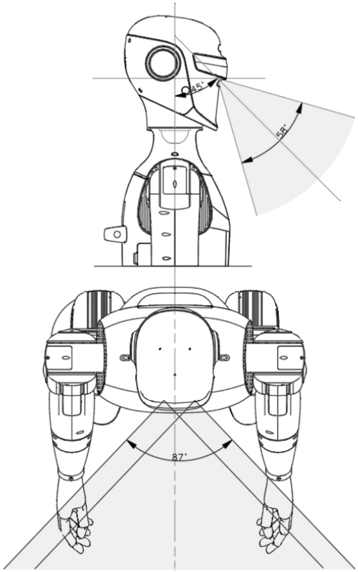

MID360 FOV

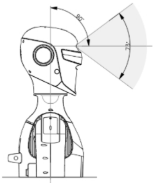

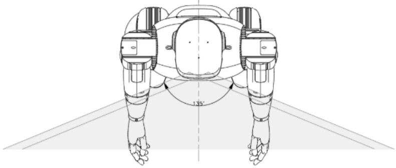

Binocular camera FOV

D435 depth camera FOV

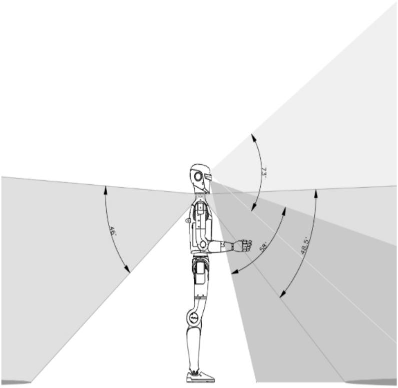

MID360 and D435 depth camera and Binocular camera merged FOV

Joint Motor

The joints of MagicBot Z1 are equipped with Magic Atom's full stack self-developed motors, which have excellent performance and features. The maximum torque of the motor is 130 N.m, and the motor structure is lightweight and compact. The motor is also equipped with dual encoders, providing more accurate position and speed feedback to meet the requirements of high-precision control. Joint sequence names and joint limits

Joint number	Joint name	Limit (radians)
1	left_hip_pitch_joint	-2.7925~2.7925
2	left_hip_roll_joint	-0.524~2.967
3	left_hip_yaw_joint	-2.7925~2.7925
4	left_knee_joint	0~2.653
5	left_ankle_pitch_joint	-0.83~0.524
6	left_ankle_roll_joint	-0.262~0.262
7	right_hip_pitch_joint	-2.7925~2.7925
8	right_hip_roll_joint	-2.967~0.524
9	right_hip_yaw_joint	-2.7925~2.7925
10	right_knee_joint	0~2.653
11	right_ankle_pitch_joint	-0.83~0.524
12	right_ankle_roll_joint	-0.262~0.262

13	left_shoulder_pitch_joint	-2.88~2.88
14	left_shoulder_roll_joint	-0.175~2.2515
15	left_shoulder_yaw_joint	-2.618~2.618
16	left_elbow_joint	-0.96~1.70
17	left_wrist_yaw_joint	-2.618~2.618
18	right_shoulder_pitch_joint	-2.88~2.88
19	right_shoulder_roll_joint	-2.2515~0.175
20	right_shoulder_yaw_joint	-2.618~2.618
21	right_elbow_joint	-0.96~1.70
22	right_wrist_yaw_joint	-2.618~2.618

Degree of Freedom Configuration, Coordinate System, Joint Rotation Axis, and Joint Zero Point

When all joints are at zero degrees, the coordinate systems are as shown in the figure below. Red represents the x-axis, green represents the y-axis, and blue represents the z-axis.

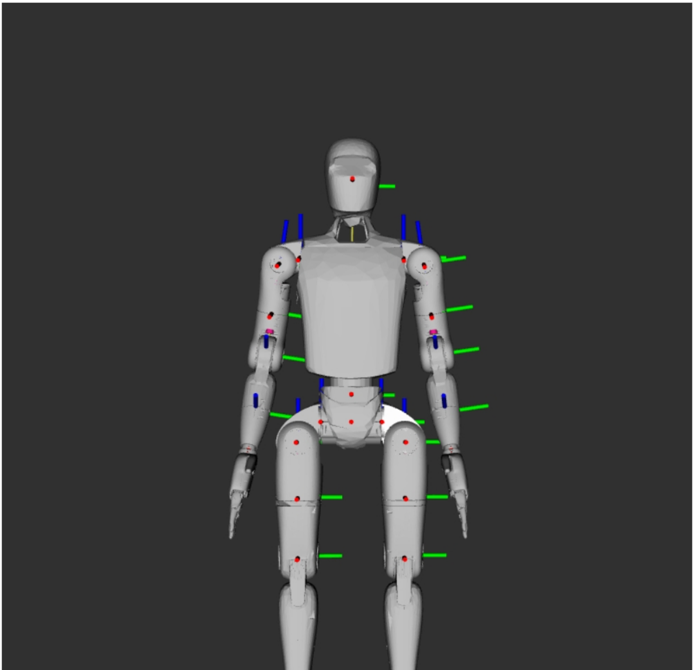

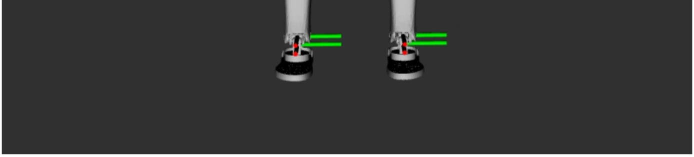

Specification Parameters

Category	Specifications	Z1	Z1 Development Edition
Mechanical Parameters	Height, Width, and Depth (Standing)	1369*422*200mm	1369*422*200mm
	Height, Width, and Depth (Folded)	730*422*395mm	730*422*395mm
	Weight with battery	Approximately 40kg	Approximately 40kg+
	Total degrees of freedom (number of joints)	24	24 - 50
	Single-leg degrees of freedom	6	6
	Head degrees of freedom	1	1
	Waist degrees of freedom	1	1
	Single Arm DOF	5	5+ (2 wrist DOF optional)
	Dexterous Hand DOF	/	Optional 11-DOF Haptic Dexterous Hand
	Joint Output Bearing	Industrial-grade high-rigidity roller bearing (can withstand 8.7 kN impact force)	Industrial-grade high-rigidity roller bearing (can withstand 8.7 kN impact force)
	Joint Motor	Low-inertia, high-speed, high-overload permanent magnet synchronous motor (control frequency 25kHz, high burst force, improved heat dissipation)>	Low inertia, high speed, high overload permanent magnet synchronous motor (control frequency 25kHz, high burst force, improved heat dissipation)
	Maximum knee torque*	100N.m	130N.m
	Maximum arm load*	2kg	3kg
	Calf + thigh length	0.6m	0.6m
	Arm span	Approximately 0.5m	Approximately 0.5m
	Head Z-axis joint range of motion	±40°	±40°
	Waist Z-axis joint range of motion	±160°	±160°>
	Knee joint range of motion	0-152°,	0-152°,
	Hip joint range of motion	P ±160°, R -30-+110°, Y ±160°	P ±160°, R -30~+110°, Y ±160°

Electrical Characteristics	Joint Encoder	Dual Encoder	Dual Encoder
	Cooling System	Intelligent Air Cooling	Intelligent Air Cooling
	Power Supply	15-cell Battery	15-cell Battery
	Basic Computing Power	8-core High-Performance CPU	8-core High-Performance CPU
	Perception Sensors:	3D LiDAR + Depth Camera + Binocular Fisheye Camera + Head Tactile Sensor	3D LiDAR + Depth Camera + Binocular Fisheye Camera + Head Tactile Sensor
	WiFi6, Bluetooth 5.2	Yes	Yes
	Microphone Array	Yes	Yes
	5W Speaker	Yes	Yes
Supporting Equipment	High Computing Power Module	No	Optional
	Smart Battery (Quick Release)	10000mAh	10000mAh
	Charger	62V 5A	62V 5A
	Handheld Remote Control	Yes	Yes
Other	Battery Life*	Approximately 2 hours	Approximately 2 hours
	OTA Upgrade	Supported	Supported
	Secondary Development	No	Yes

*Maximum torque, maximum arm load, endurance time, etc. are measured under laboratory conditions.

*The above parameters may vary under different business scenarios and device configurations. Please refer to the actual usage experience.