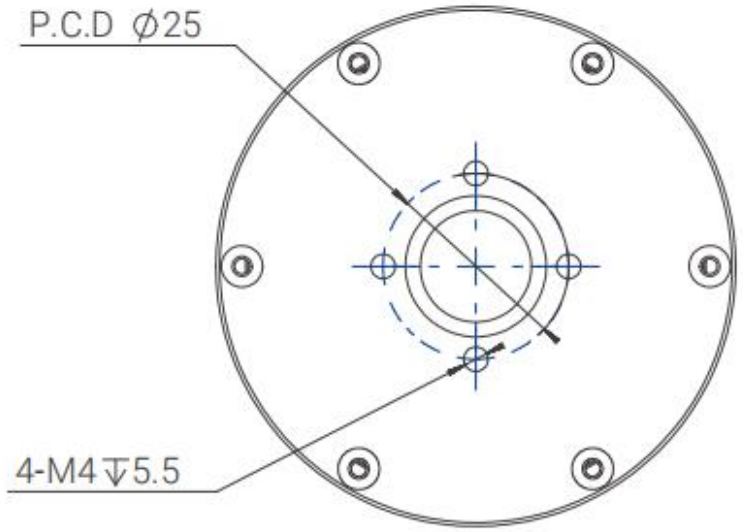
P.C.D ∅25
4-M4↧5.5

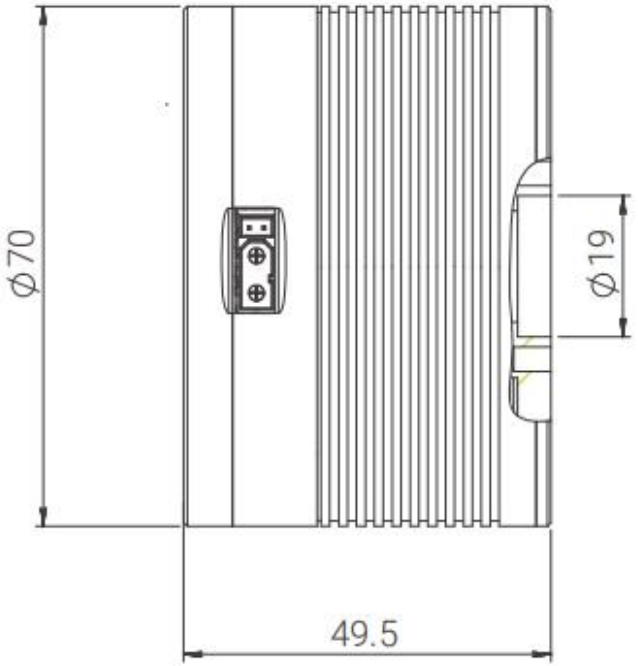
∅70
∅19
49.5

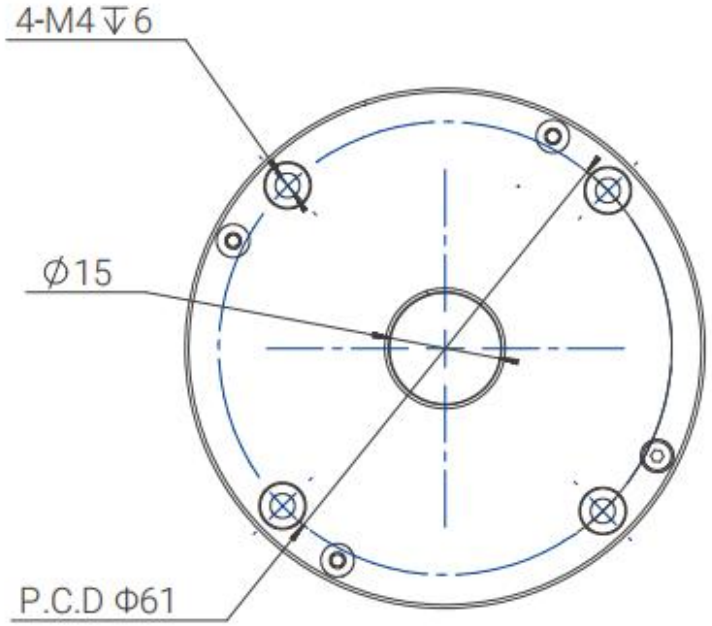
4-M4↧6
∅15
P.C.D Φ61

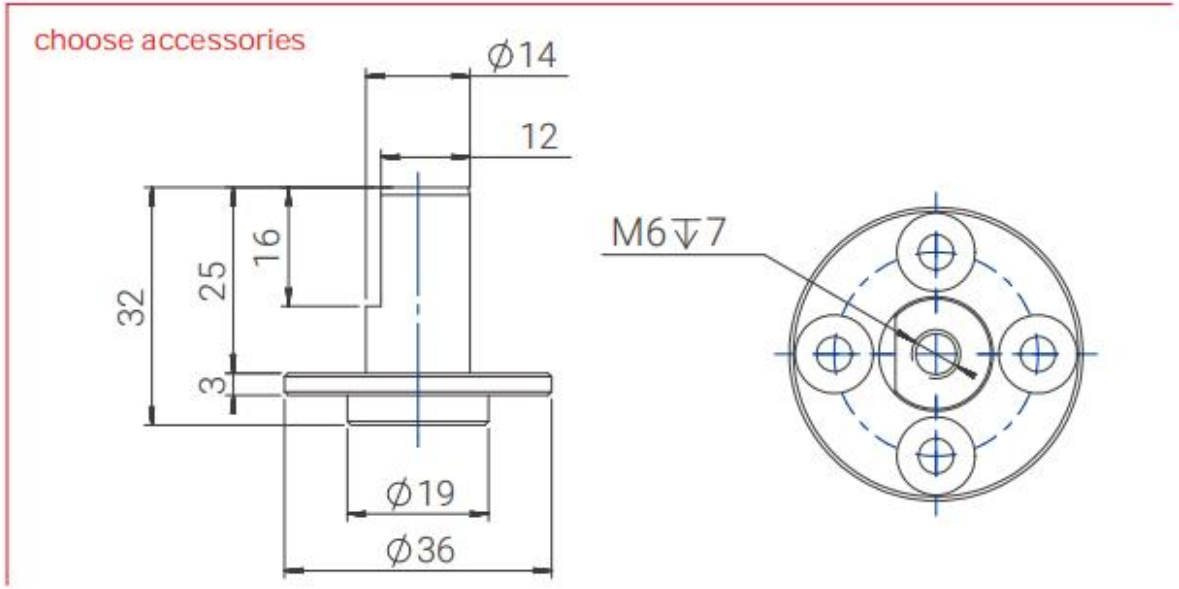
choose accessories
∅14
12
32
25
16
3
∅19
∅36
M6↧7