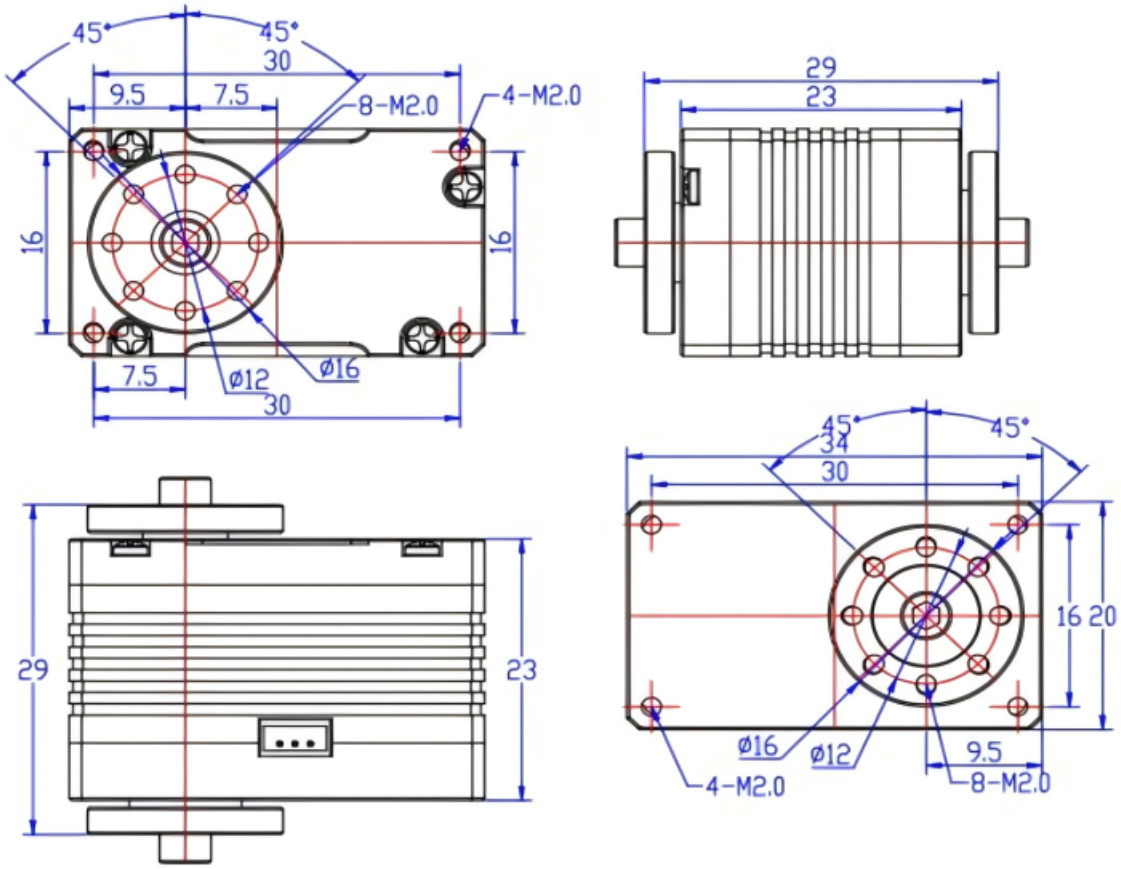
45°
45°
30
9.5
7.5
8-M2.0
4-M2.0
16
16
7.5
ø12
ø16
30
29
23
29
23
45°
45°
34
30
16 20
ø16
ø12
9.5
4-M2.0
8-M2.0

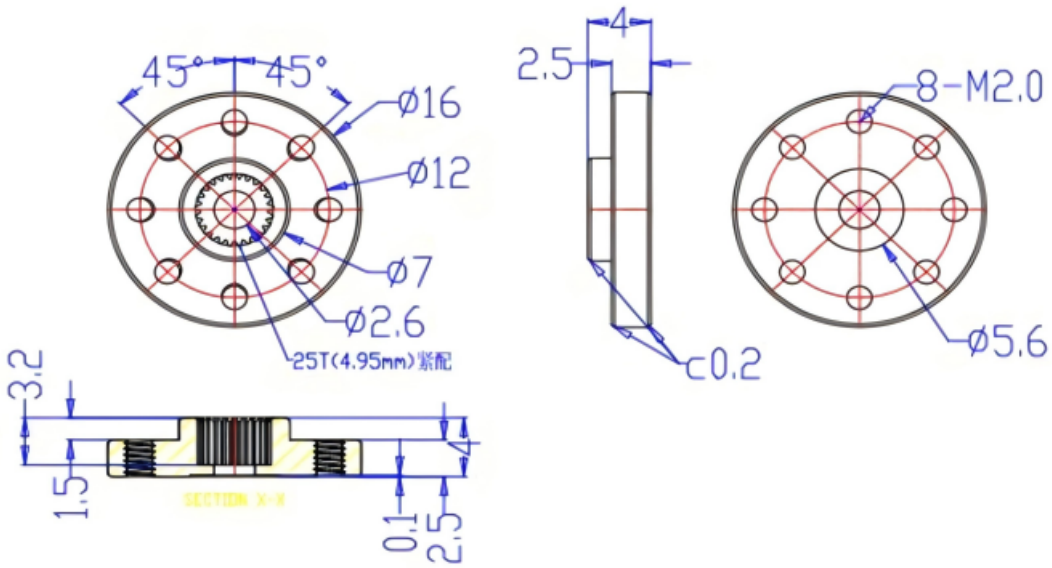
45°
45°
Ø16
Ø12
Ø7
Ø2.6
25T(4.95mm)紧配
4
2.5
8-M2.0
C0.2
Ø5.6
3.2
1.5
SECTION X-X
0.1
2.5
4

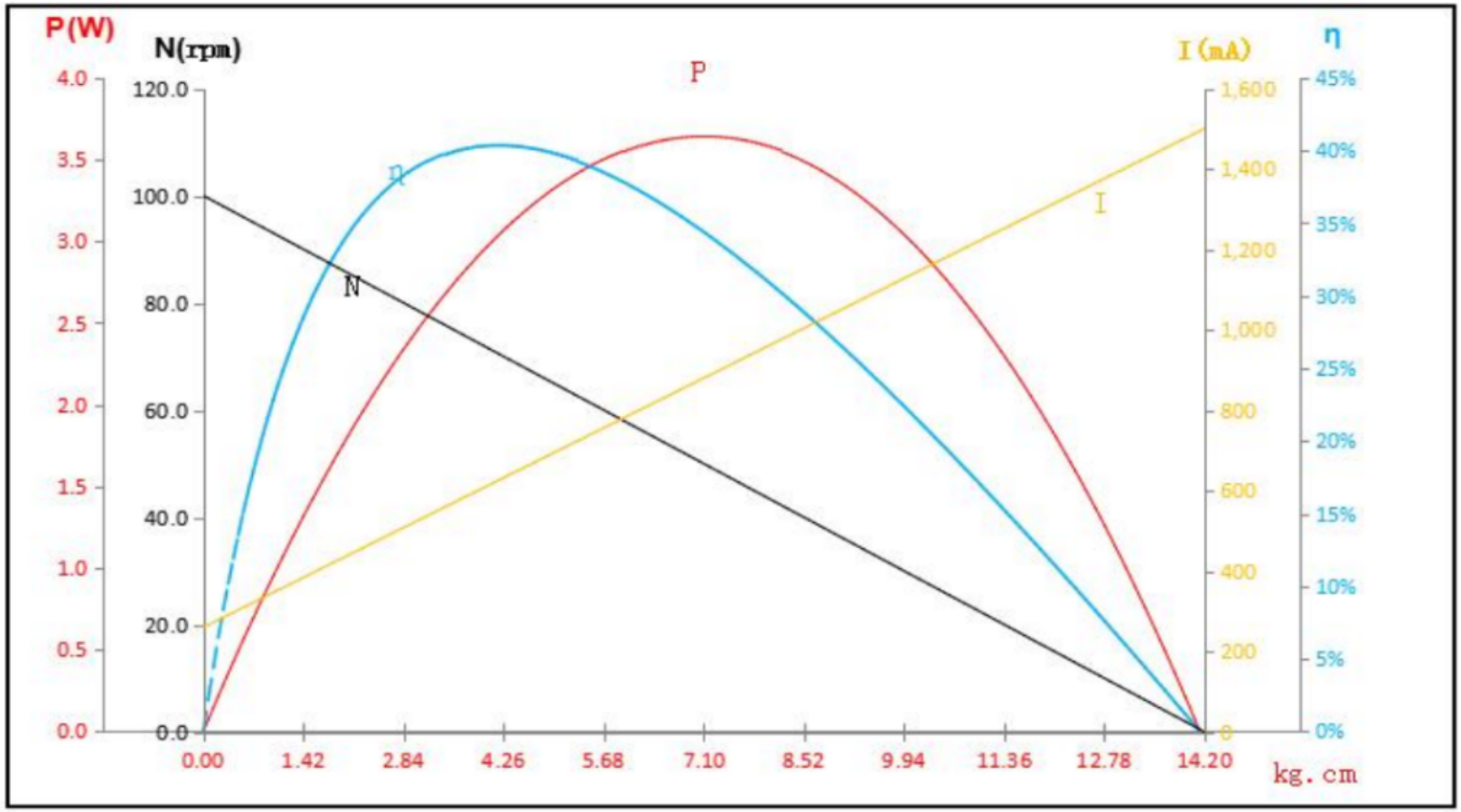
P(W)
N(rpm)
I(mA)
η
P
η
N
I
4.0
3.5
3.0
2.5
2.0
1.5
1.0
0.5
0.0
120.0
100.0
80.0
60.0
40.0
20.0
0.0
1,600
1,400
1,200
1,000
800
600
400
200
0
45%
40%
35%
30%
25%
20%
15%
10%
5%
0%
0.00
1.42
2.84
4.26
5.68
7.10
8.52
9.94
11.36
12.78
14.20
kg.cm