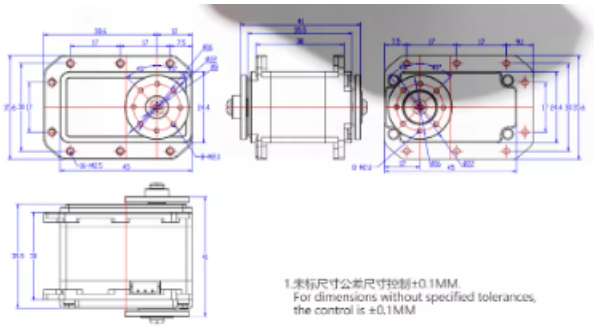

1.未标尺寸公差尺寸控制±0.1MM.
For dimensions without specified tolerances,
the control is ±0.1MM

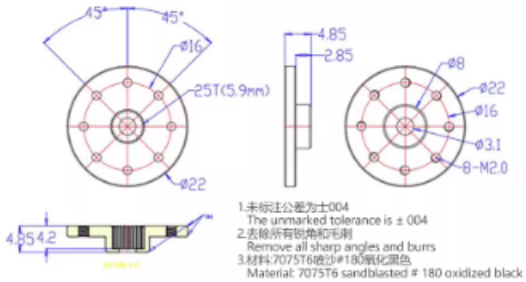


1.未标注公差为±004
The unmarked tolerance is ± 004
2.去除所有锐角和毛刺
Remove all sharp angles and burrs
3.材料:7075T6喷沙#180氧化黑色
Material: 7075T6 sandblasted # 180 oxidized black