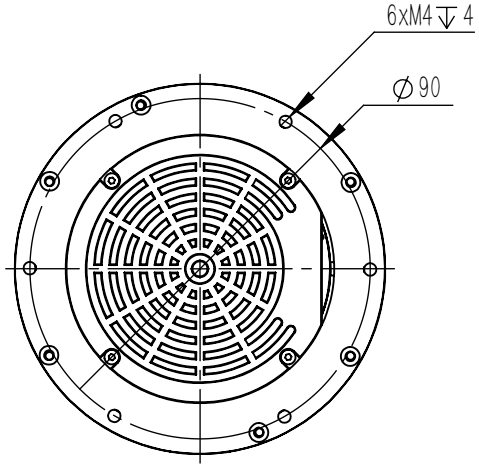

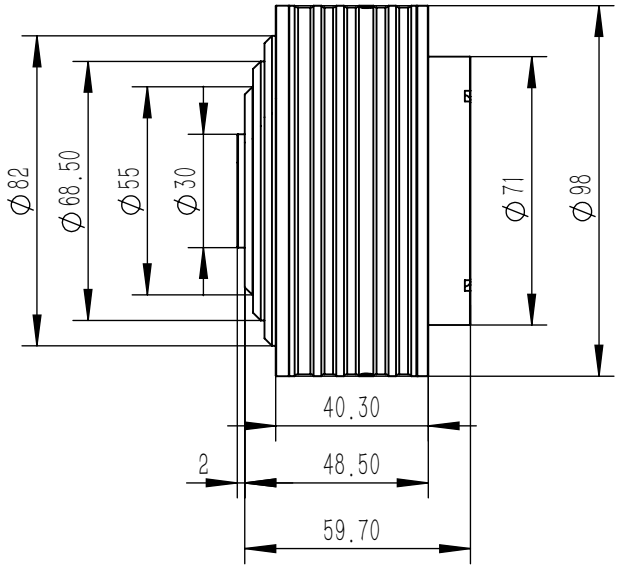

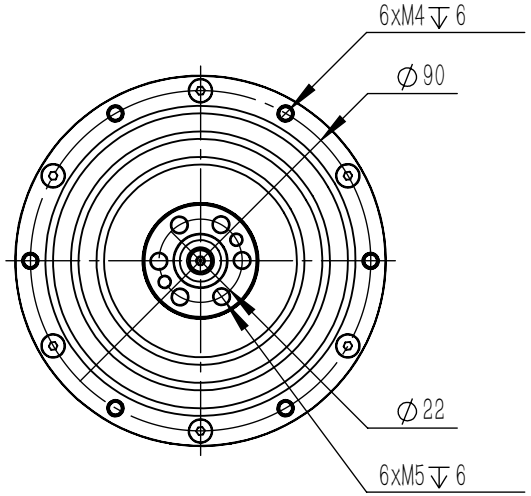

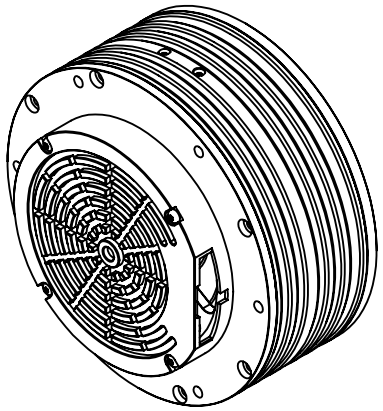

						1		1			