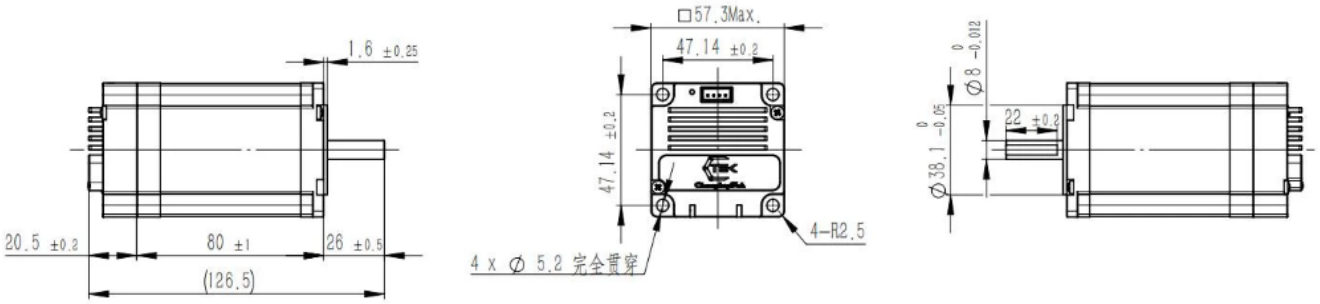
1.6 ±0.25
20.5 ±0.2
80 ±1
26 ±0.5
(126.5)
□57.3Max.
47.14 ±0.2
47.14 ±0.2
4 x ∅ 5.2 完全貫穿
4-R2.5
∅8 0 -0.012
22 ±0.2
∅38.1 0 -0.05